DIAGRAMA ELÉTRICO - REALCUT 66

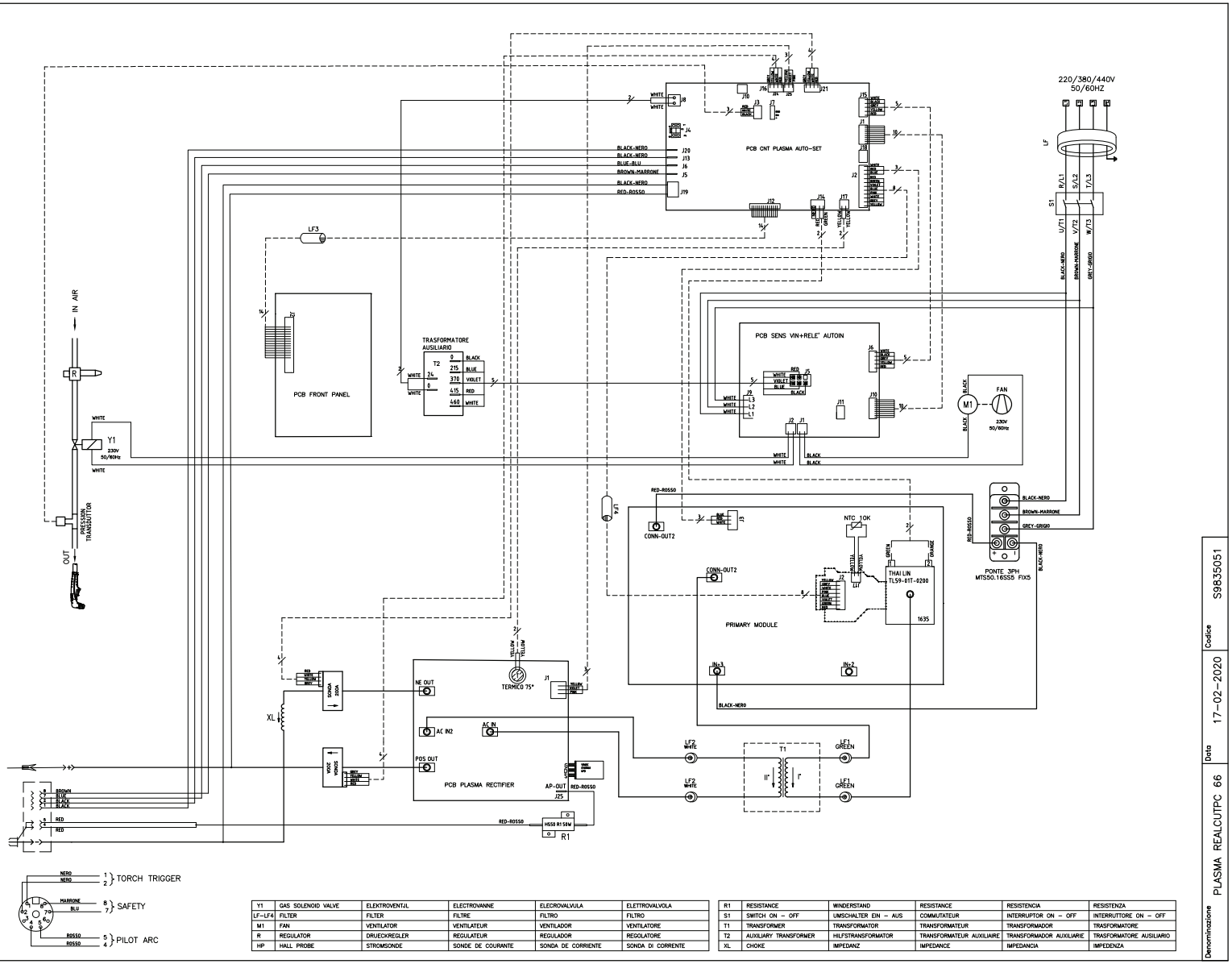

Y1	GAS SOLENOID VALVE	ELEKTROVENTIL	ELECTROVANNE	ELECROVALVULA	ELETTROVALVOLA
LF-LF4	FILTER	FILTER	FILTRE	FILTRO	FILTRO
M1	FAN	VENTILATOR	VENTILATEUR	VENTILADOR	VENTILATORE
R	REGULATOR	DRUECKREGLER	REGULATEUR	REGULADOR	REGOLATORE
HP	HALL PROBE	STROMSONDE	SONDE DE COURANTE	SONDA DE CORRIENTE	SONDA DI CORRENTE

R1	RESISTANCE	WINDERSTAND	RESISTANCE	RESISTENCIA	RESISTENZA
S1	SWITCH ON – OFF	UMSCHALTER EIN – AUS	COMMUTATEUR	INTERRUPTOR ON – OFF	INTERRUTTORE ON – OFF
T1	TRANSFORMER	TRANSFORMATOR	TRANSFORMATEUR	TRANSFORMADOR	TRASFORMATORE
T2	AUXILIARY TRANSFORMER	HILFSTRANSFORMATOR	TRANSFORMATEUR AUXILIAIRE	TRANSFORMADOR AUXILIARIE	TRASFORMATORE AUSILIARIO
XL	CHOKE	IMPEDANZ	IMPEDANCE	IMPEDANCIA	IMPEDENZA

Codice	S9835051
Data	17-02-2020
Denominazione	PLASMA REALCUTPC 66