DIAGRAMA ELÉTRICO - REALCUT 85 380V

Rev.06/2019-V3

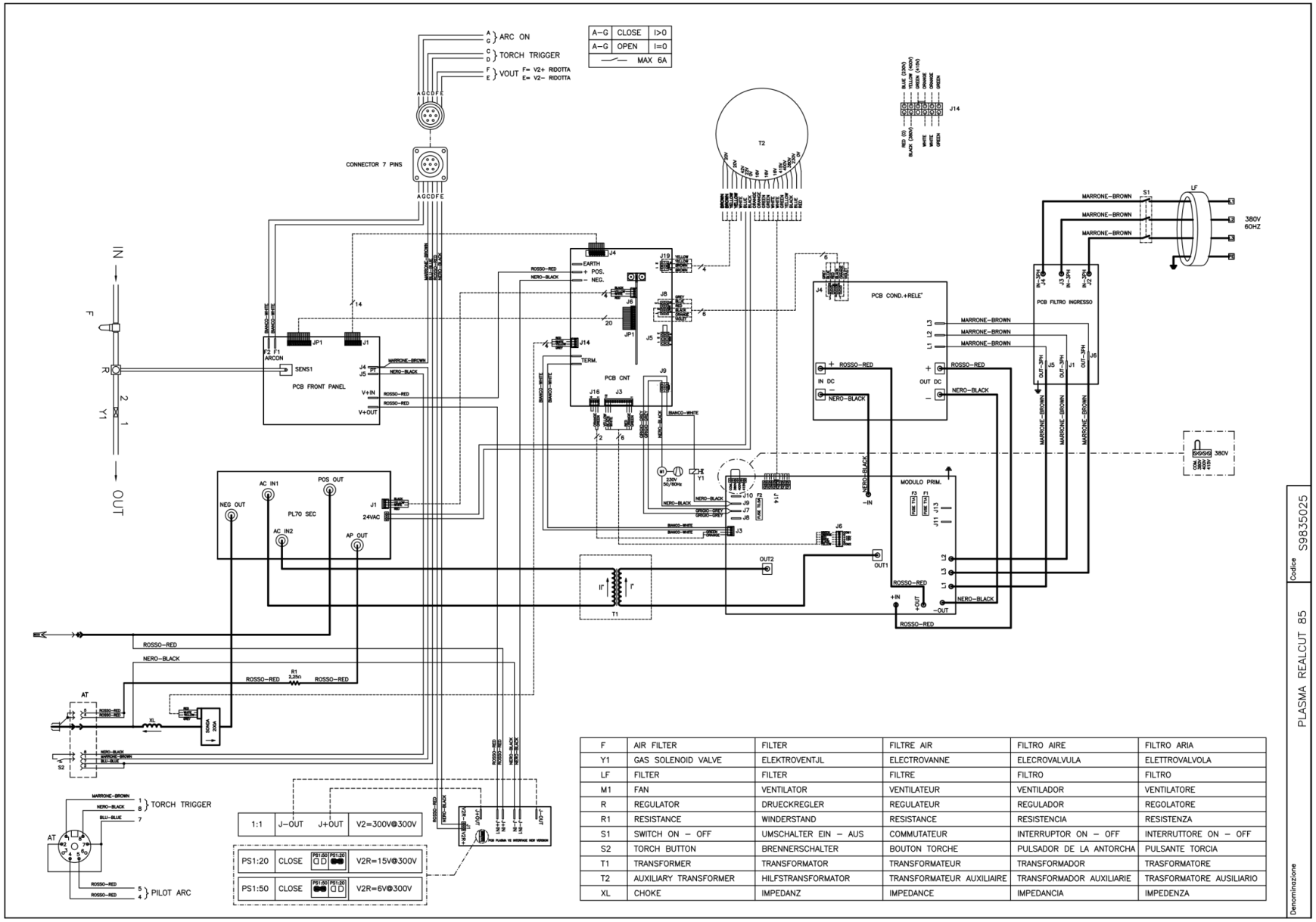

F	AIR FILTER	FILTER	FILTRE AIR	FILTRO AIRE	FILTRO ARIA
Y1	GAS SOLENOID VALVE	ELEKTROVENTJL	ELECTROVANNE	ELECROVALVULA	ELETTROVALVOLA
LF	FILTER	FILTER	FILTRE	FILTRO	FILTRO
M1	FAN	VENTILATOR	VENTILATEUR	VENTILADOR	VENTILATORE
R	REGULATOR	DRUECKREGLER	REGULATEUR	REGULADOR	REGOLATORE
R1	RESISTANCE	WINDERSTAND	RESISTANCE	RESISTENCIA	RESISTENZA
S1	SWITCH ON – OFF	UMSCHALTER EIN – AUS	COMMUTATEUR	INTERRUPTOR ON – OFF	INTERRUTTORE ON – OFF
S2	TORCH BUTTON	BRENNERSCHALTER	BOUTON TORCHE	PULSADOR DE LA ANTORCHA	PULSANTE TORCIA
T1	TRANSFORMER	TRANSFORMATOR	TRANSFORMATEUR	TRANSFORMADOR	TRASFORMATORE
T2	AUXILIARY TRANSFORMER	HILFSTRANSFORMATOR	TRANSFORMATEUR AUXILIAIRE	TRANSFORMADOR AUXILIARIE	TRASFORMATORE AUSILIARIO
XL	CHOKE	IMPEDANZ	IMPEDANCE	IMPEDANCIA	IMPEDENZA